1

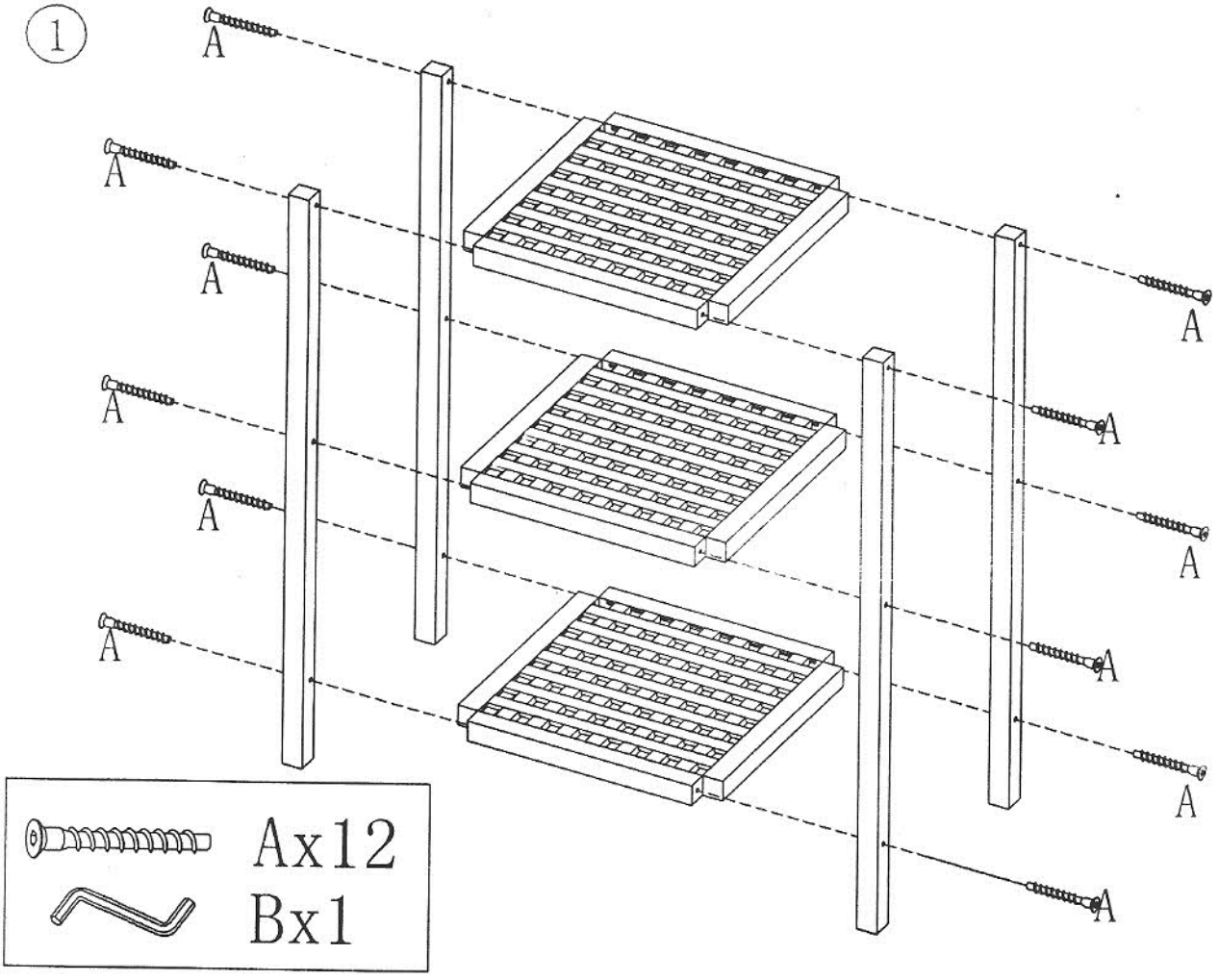

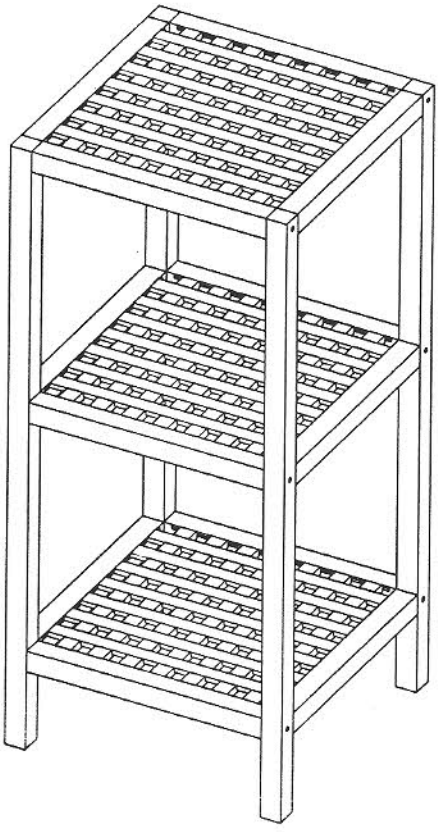
2