Ref.: 578

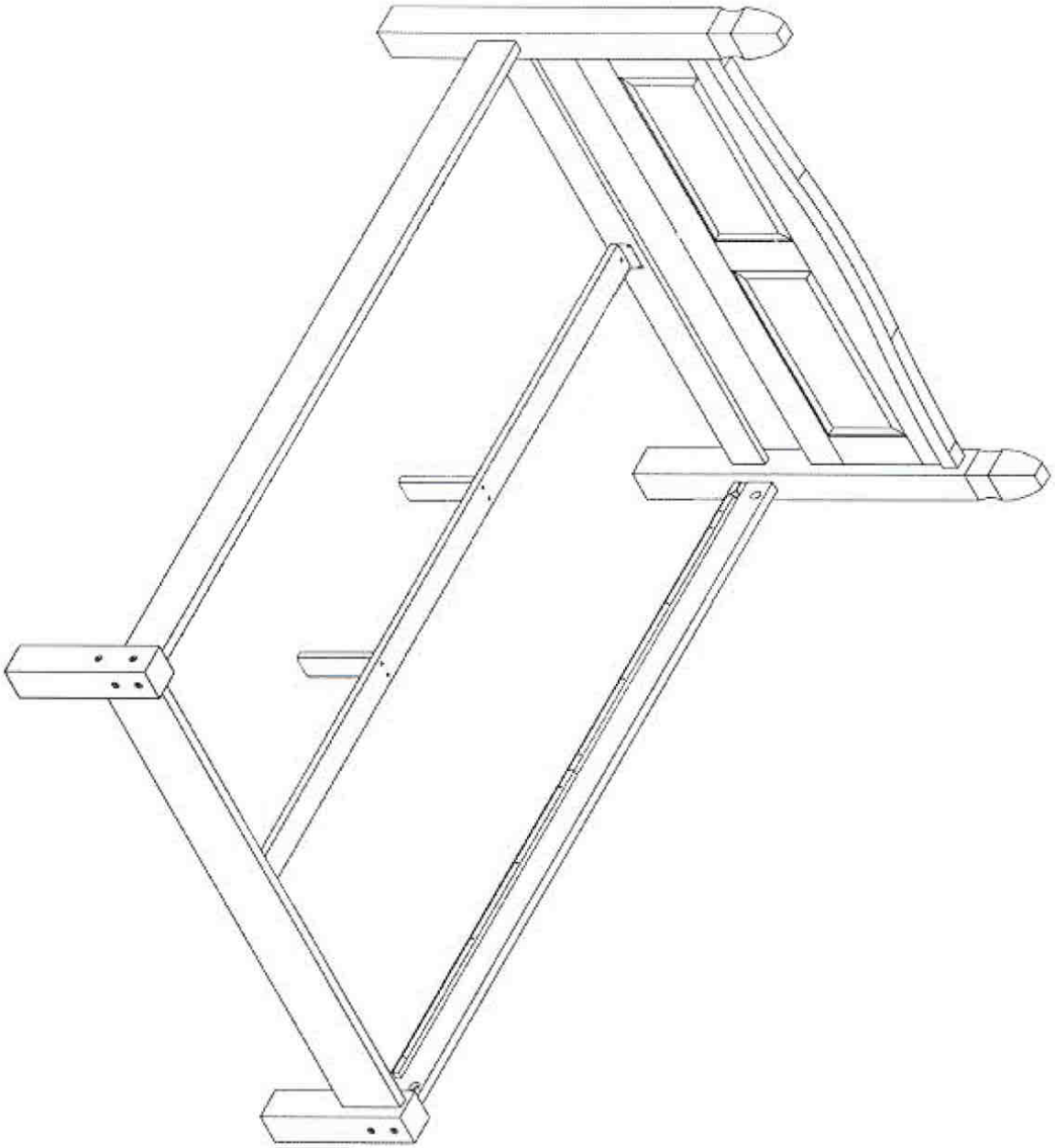

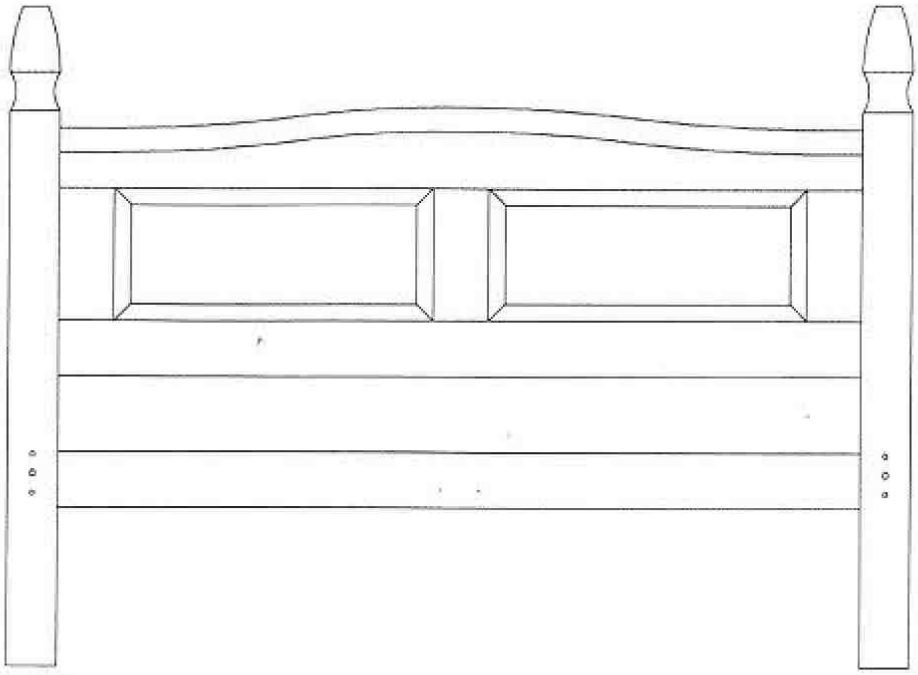

1 110 x 151,6cm

2 134,6 x 16cm

3 200 x 11,2cm (2x)

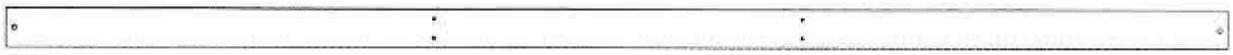

4 205,5 x 6,5cm

6 28,3 x 6,5cm (2x)

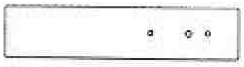

7 39 x 8,4cm

8 39 x 8,4cm

A x 6

Ø10x40mm

G x 12

Ø1/4x130mm

C x 8

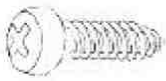

Ø4,0x16mm

H x 12

D x 4

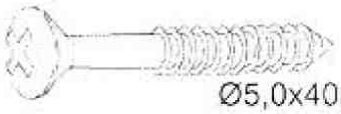

Ø5,0x40mm

J x 2

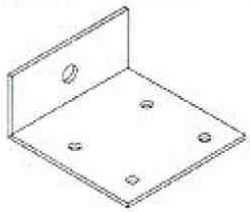

E x 2

K x 1

F x 2

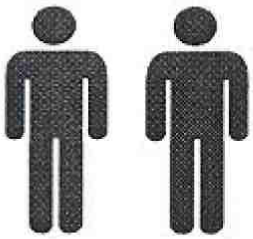

40 min

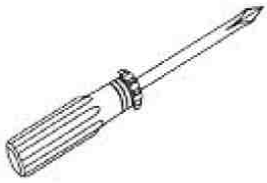

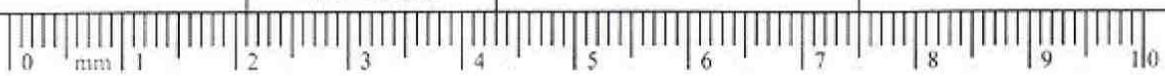

1

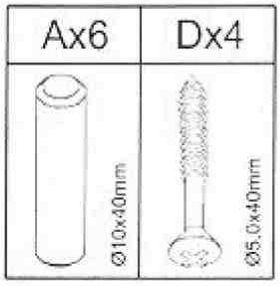

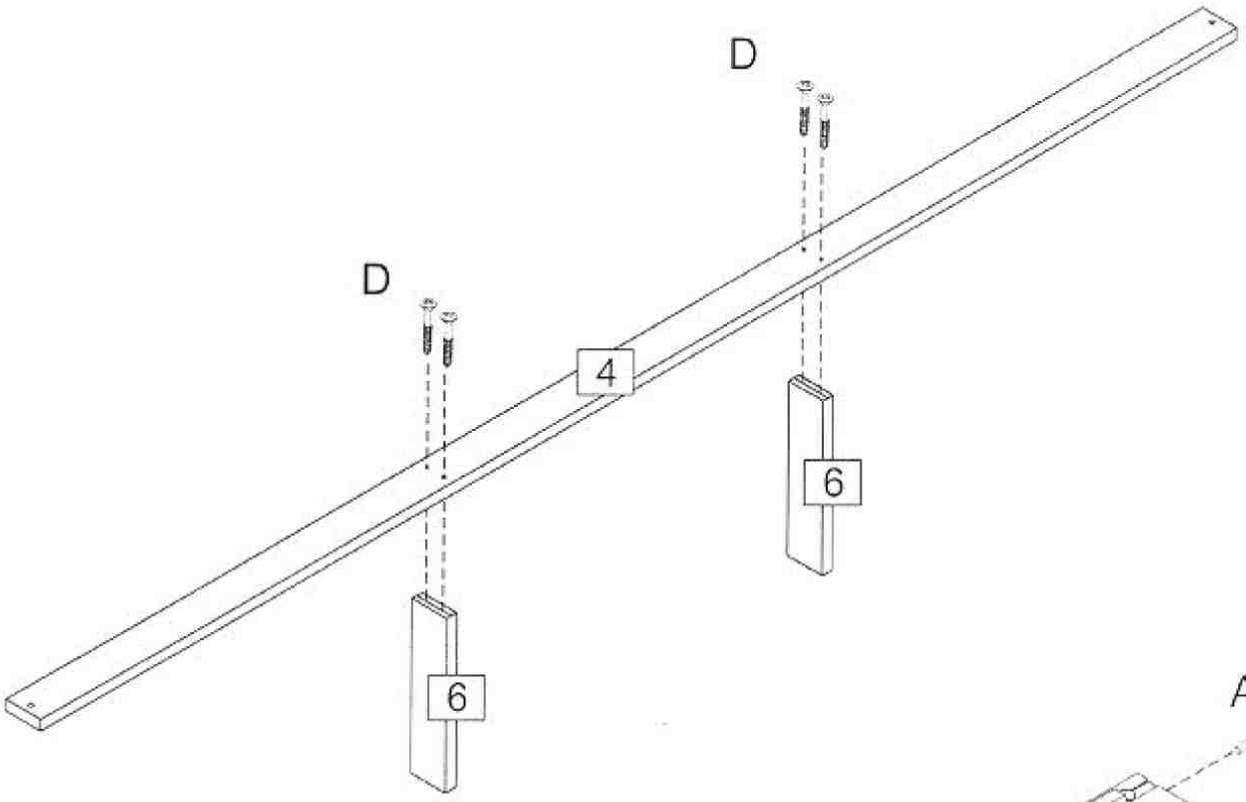

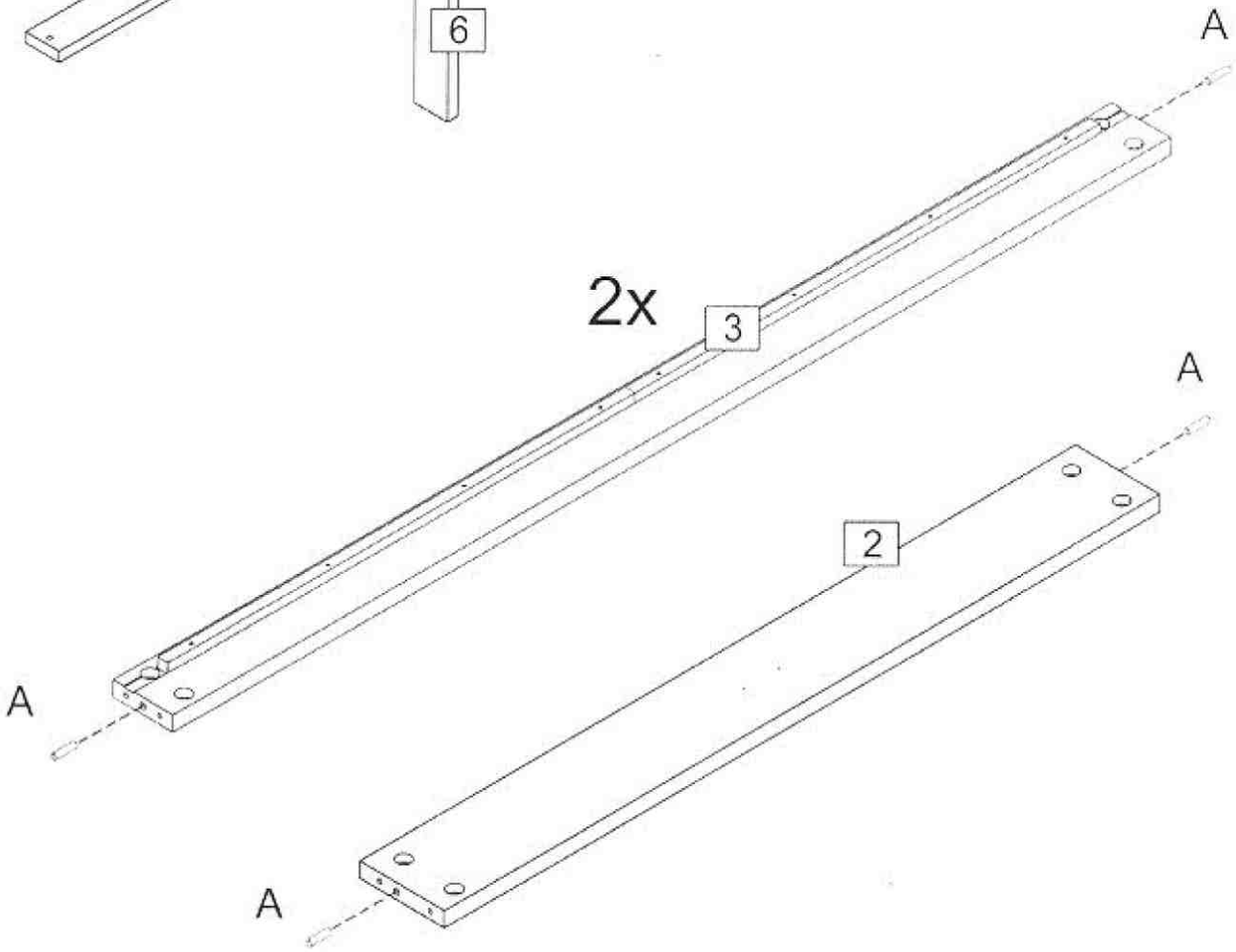

2

Gx4	Hx4	Kx1

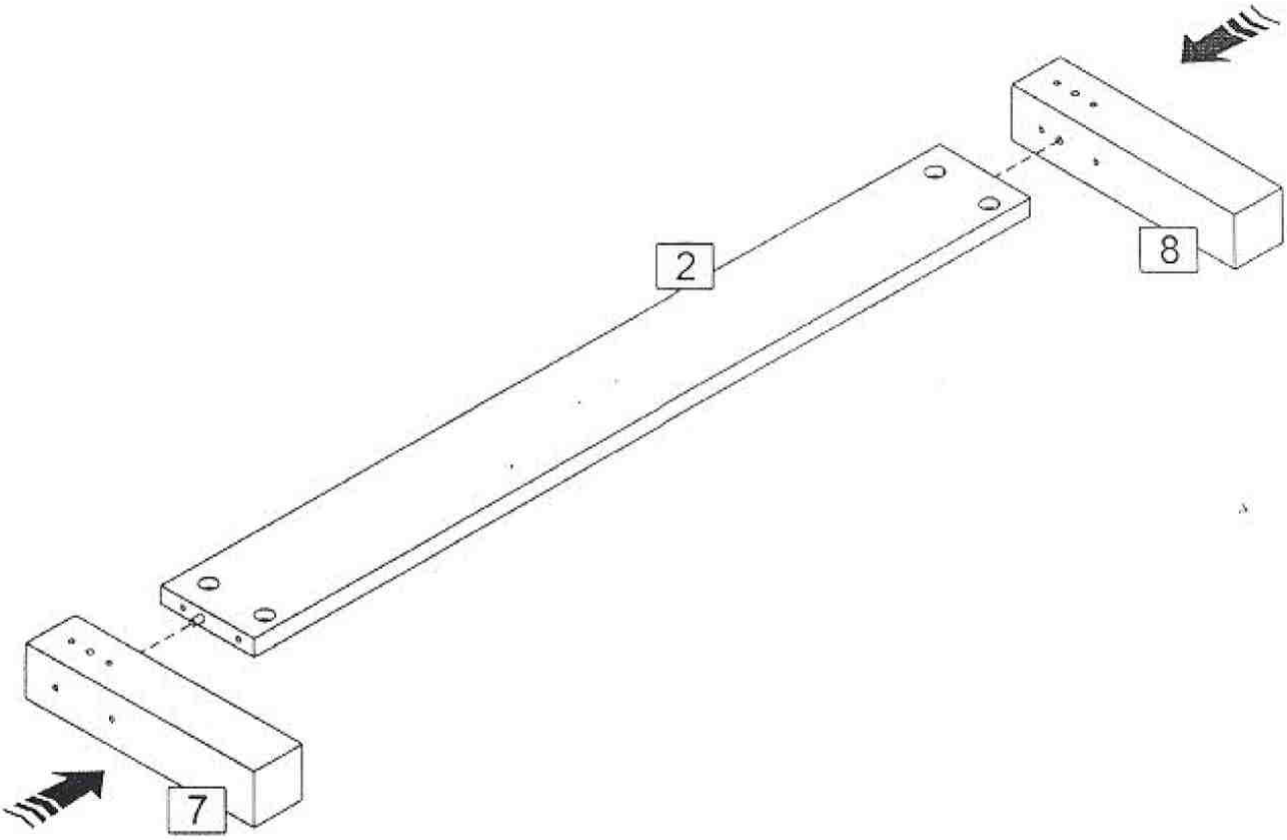

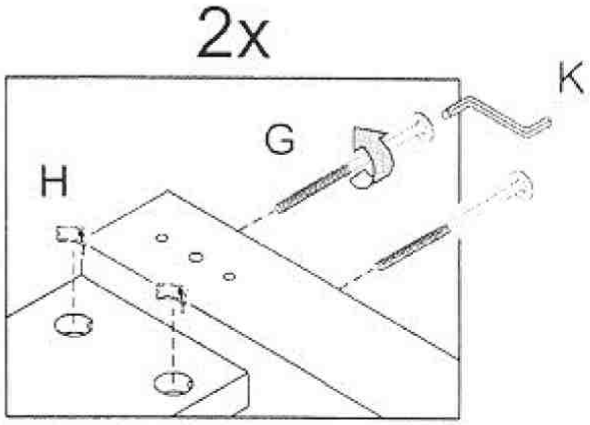

3

Cx8	Jx2
Ø4.0x16mm	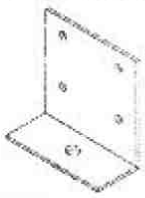

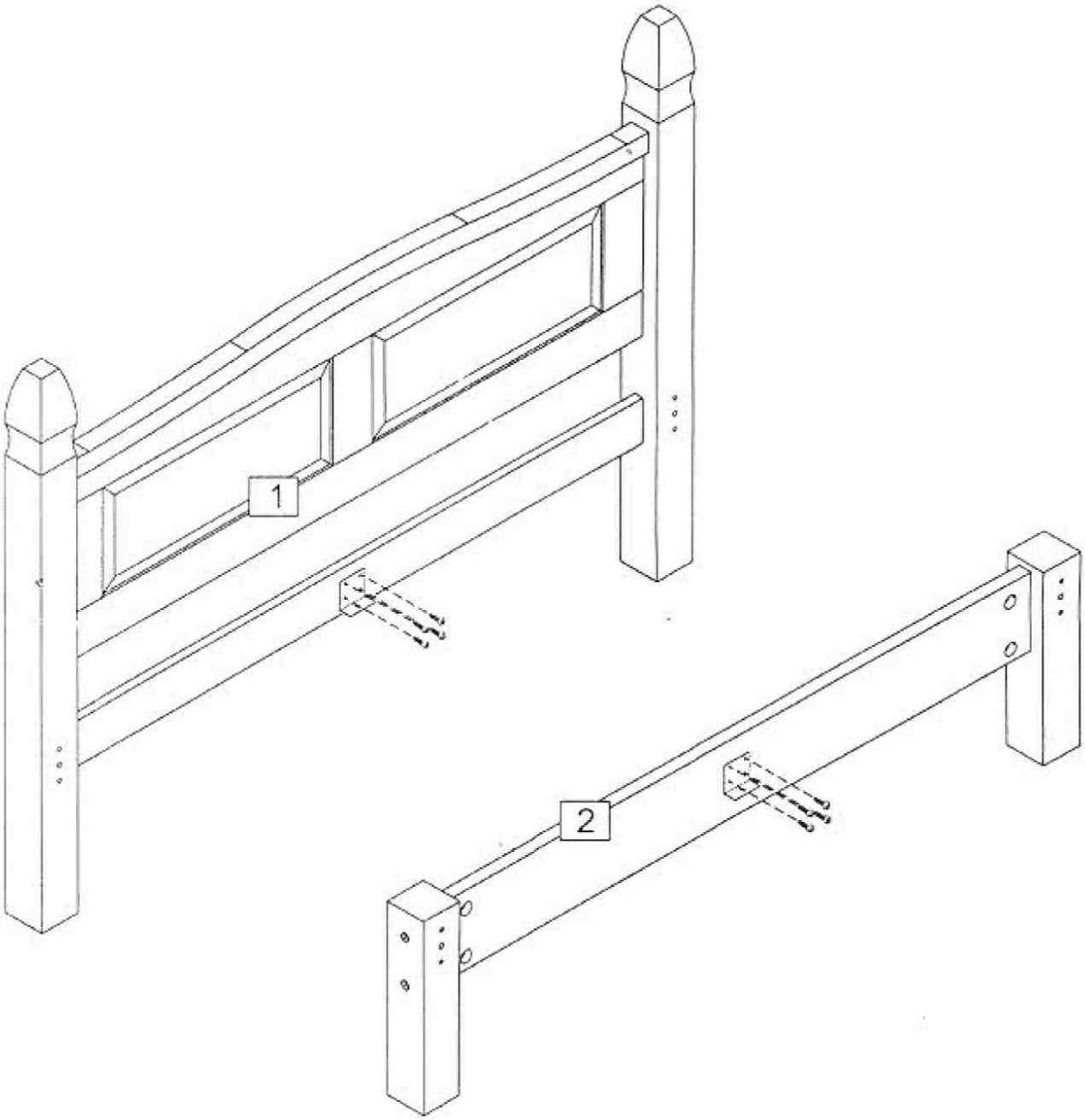

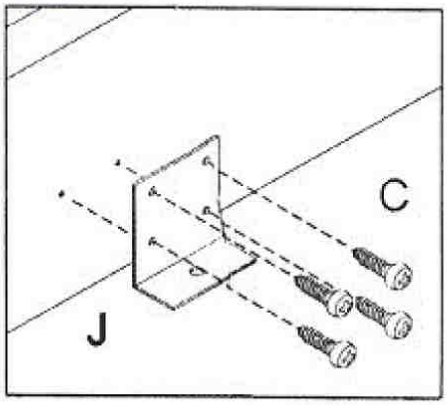

4

Ex1	Fx1	Gx4	Hx4	Kx1
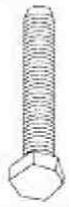	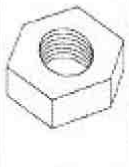			

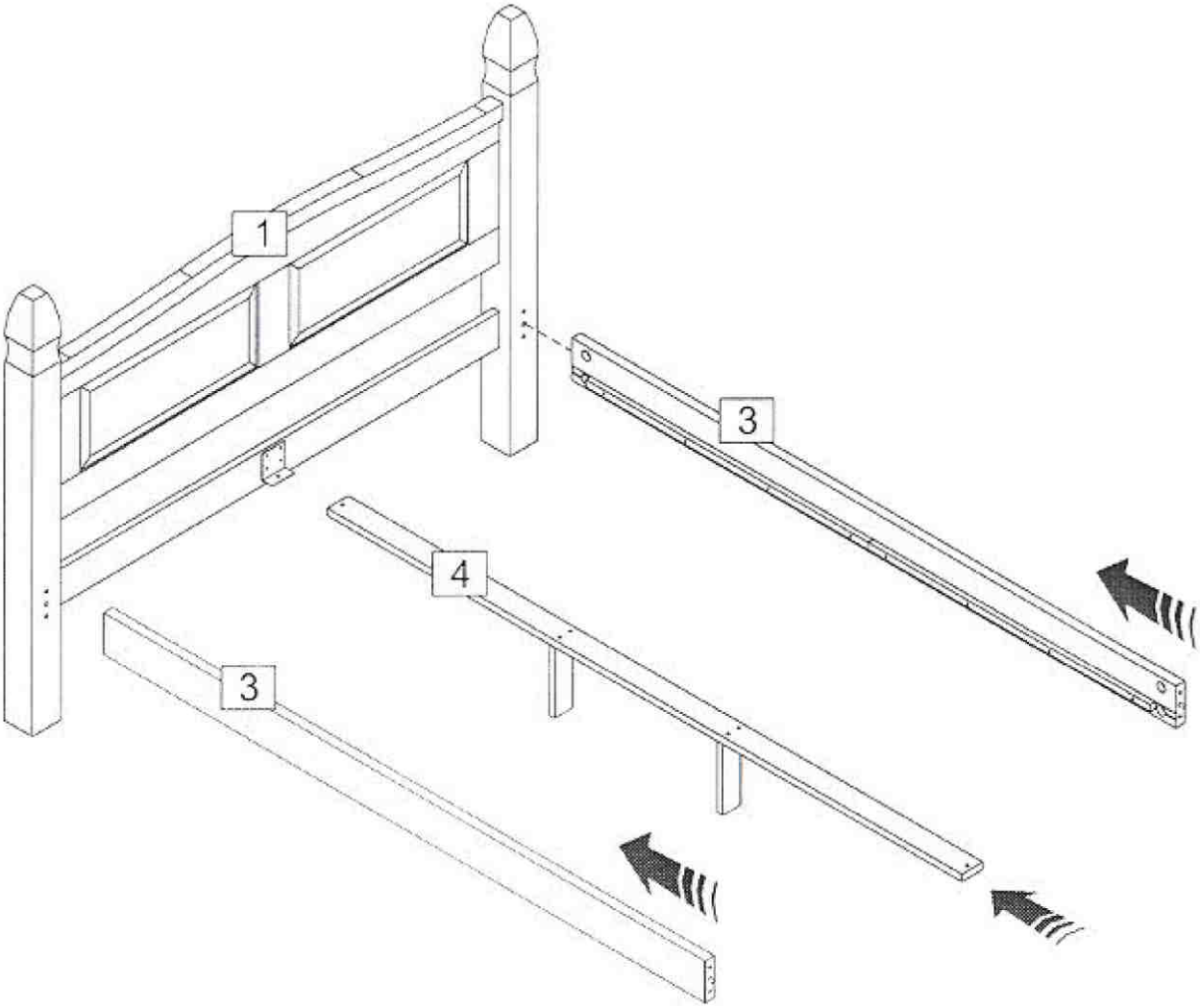

a:

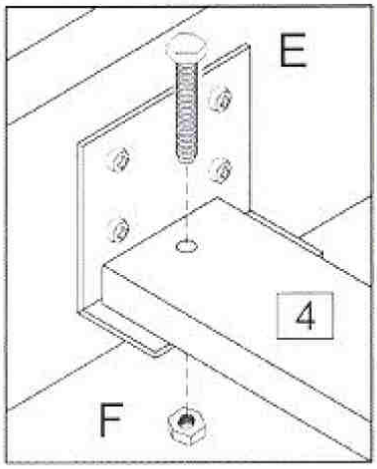

b:

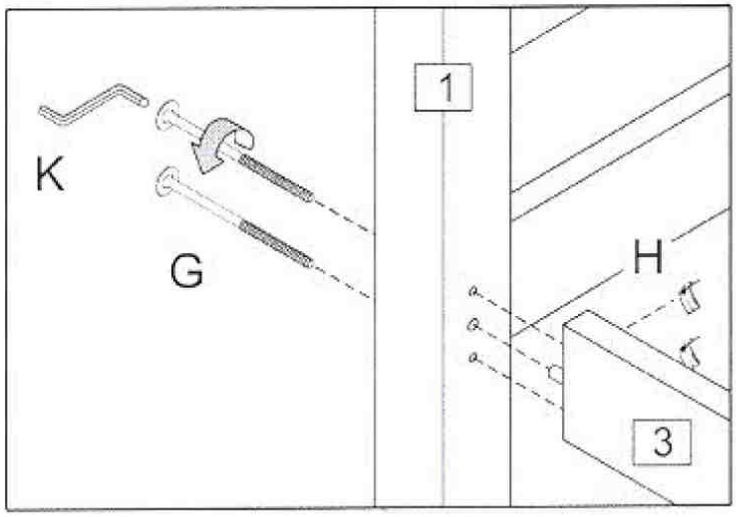

5

Ex1	Fx1	Gx4	Hx4	Kx1
	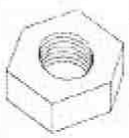			

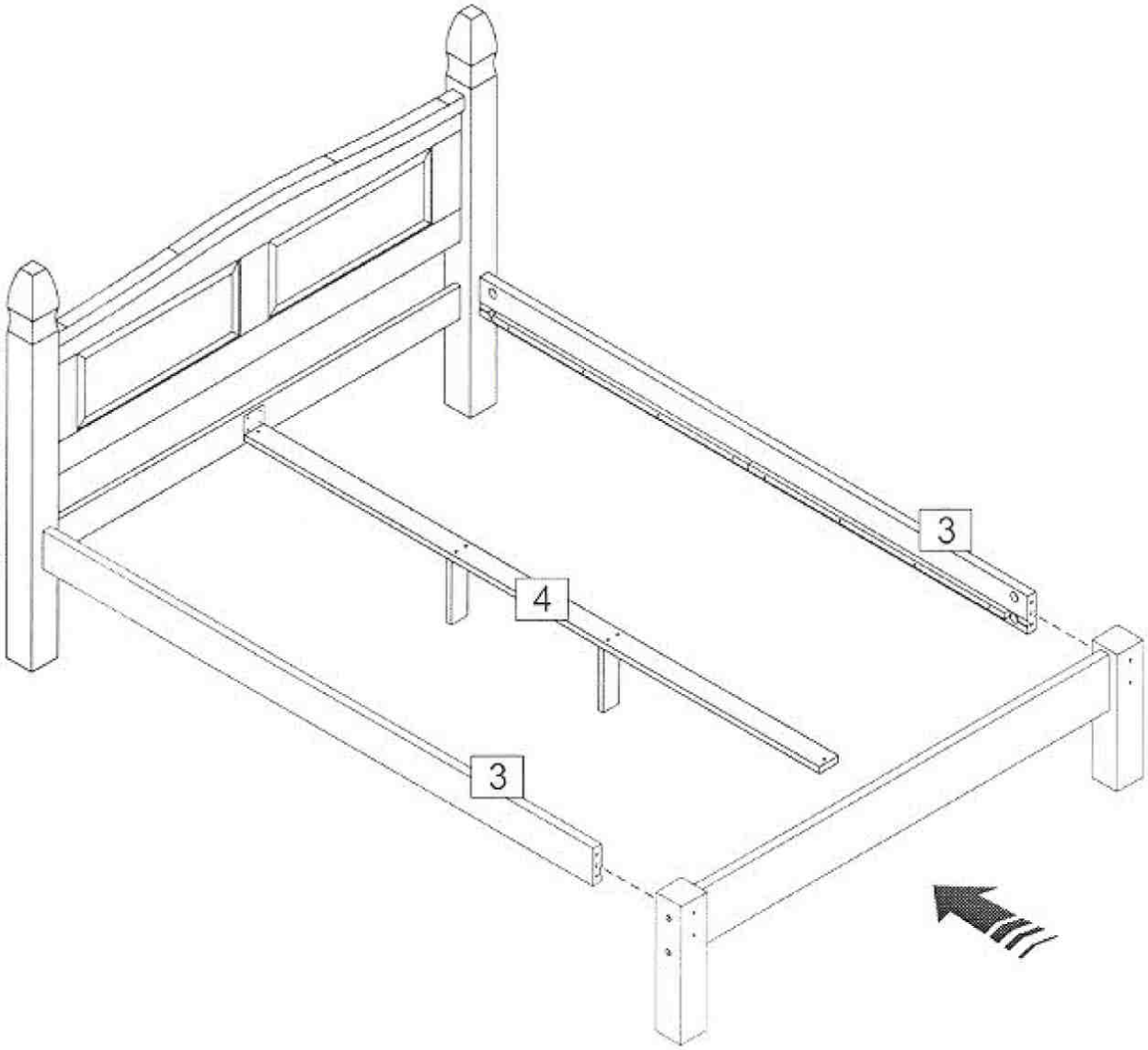

a:

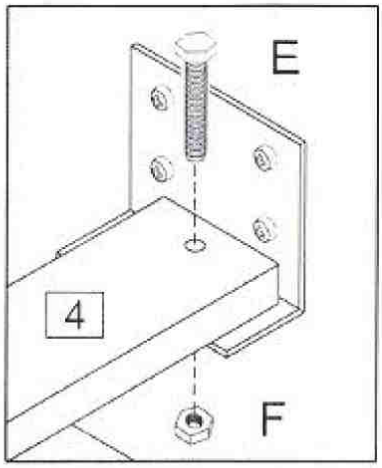
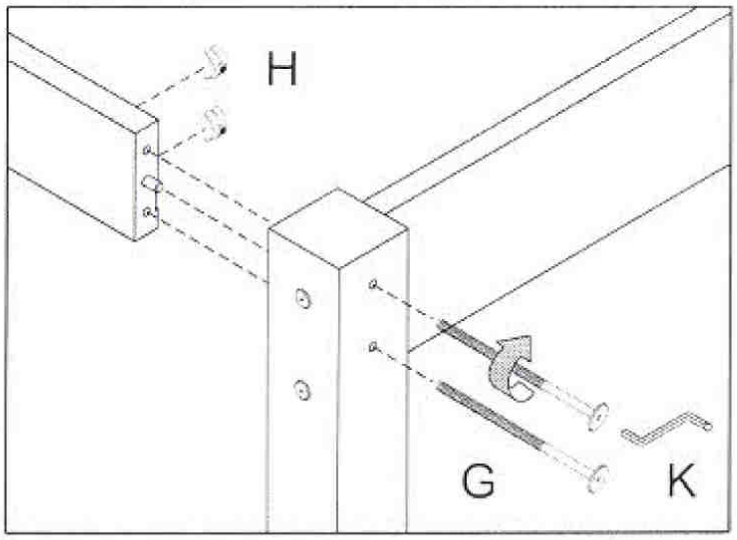
b: